SILIA

Concealed shower set, with a shower head

Product code: NQS_F9YK
EAN: 5907650819202
Color: brushed steel
Warranty [years]: 7





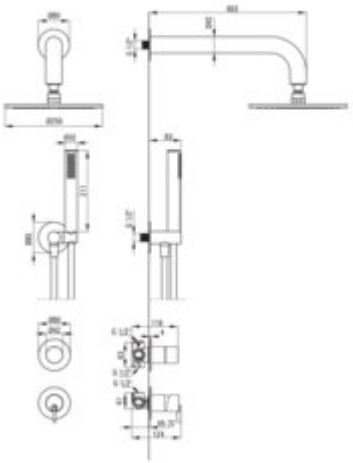

Mixer

Mixer type	single-handle, mixer, 2-function, 3-function
Installation method	concealed
Flow class [l/min]	S - 15.1-19.8 l/min
Acoustic group [dB]	I (x <= 20)

Spout

Spout type	still
Range of shower/ bath spout [mm]	382

Shower overhead

Shape	round
Material	brass
Diameter [mm]	250
Anti-calc	yes
Number of functions	1

Hand shower

Number of functions	1
Anti-calc	yes
Stream type	rain
Additional features	cool-out

Hose

Length [mm]	1500
Braid material	PVC
Anti-twist	1

Angled hose connector

Finish	steel
Connection type	for the hose with hand shower holder
Shape	round
Material	brass
Connection thread	yes
Concealed mounting	yes

Features:

- Deante Design Studio Collection
-
- Noble form and timeless simplicity
- Flush-mounted installation ensures the aesthetics of the bathroom
- Innovative and easy to maintain brushed steel coating
- Coating applied using the PVD method
- The mixer body is made of the highest quality brass
- Adjustable shower hand angle
- Anti-calc system facilitating the removal of limescale deposits
- Anti-twist system, preventing the hose from twisting
- Durable hose ends made of brass
- The set includes an orifice reducing the flow of water
- Dedicated cleaning agent, safe for cleaned surfaces
- Cool-out hand shower
- Only the best materials, the quality of which has been confirmed by laboratory tests
- The faucet includes a concealed element