ALPINIA

Shower mixer, concealed

Product code: BGA_Z44P
EAN: 5907650866527
Color: gold
Warranty [years]: 7

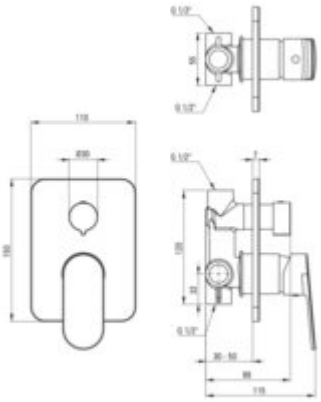

Mixer	
Finish	gold
Material	brass
Mixer type	single-handle, mixer
Installation method	concealed
Total mixer height [mm]	70
Flow class [l/min]	S - 15.1-19.8 l/min
Acoustic group [dB]	II (20 < x <= 30)
Mixer cartridge	
Ceramic cartridge size	35 mm
Function switch	
Switch type	ceramic mechanical

Features:

- Light and subtle design
- The mixer body is made of the highest quality brass
- Flush-mounted installation ensures the aesthetics of the bathroom
- Only the best materials, the quality of which has been confirmed by laboratory tests
- The faucet includes a concealed element
- Cleaning agent for fixtures in all colors available
- Coating applied using the PVD method