SILIA

Washbasin tap, tall

Product code: BQS_024K
EAN: 5907650853862
Color: chrome
Warranty [years]: 7



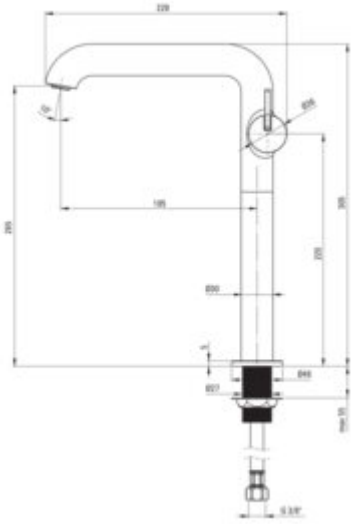

Mixer

Finish	chrome
Material	brass
Mixer type	single-handle, mixer
Installation method	standing
Total mixer height [mm]	305
Flow class [l/min]	Z - 4-9 l/min
Acoustic group [dB]	I (x <= 20)

Mixer cartridge

Ceramic cartridge size	25 mm

Aerator

Aerator type	swivel, flat
Aerator size	M24

Features:

- Deante Design Studio Collection
- Noble form and timeless simplicity
- The mixer body is made of the highest quality brass
- The mixer is equipped with a stream aerator
- The movable aerator allows you to direct the water stream
- Only the best materials, the quality of which has been confirmed by laboratory tests
- 45 cm connection hoses included
- The mounting sleeve facilitates the installation of the mixer
- Z flow class (4-9 l/min) allowing for water consumption reduction
- The lever on the side makes it easier to keep the spout clean
- Cleaning agent for fixtures in all colors available