SILIA

Concealed shower set, with a shower head

Product code: NQS_09YK
EAN: 5907650819219
Color: chrome
Warranty [years]: 7





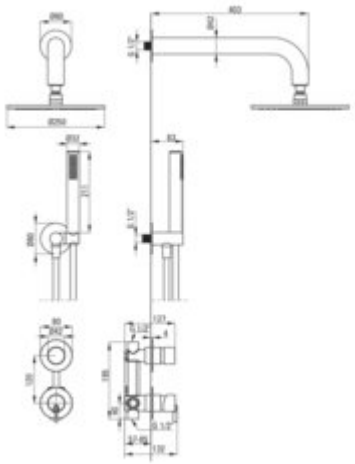

Mixer

Mixer type	single-handle, mixer, 2-function
Installation method	concealed
Flow class [l/min]	S - 15.1-19.8 l/min
Acoustic group [dB]	I (x <= 20)

Spout

Spout type	still
Range of shower/ bath spout [mm]	382

Shower overhead

Shape	round
Material	steel 304
Diameter [mm]	250
Anti-calc	yes
Number of functions	1
Stream type	rain
Quick response time for turning the water on and off	yes

Hand shower

Number of functions	1
Anti-calc	yes
Stream type	rain
Additional features	cool-out

Hose

Length [mm]	1500
Braid material	PVC
Anti-twist	1

Angled hose connector

Finish	steel
Connection type	for the hose with hand shower holder
Shape	round
Material	brass
Connection thread	yes
Concealed mounting	yes

Features:

- Deante Design Studio Collection
- Noble form and timeless simplicity
- Flush-mounted installation ensures the aesthetics of the bathroom
- The mixer body is made of the highest quality brass
- Adjustable shower hand angle
- Anti-twist system, preventing the hose from twisting
- Anti-calc system facilitating the removal of limescale deposits
- Anti-calc hand shower
- Durable hose ends made of brass
- Only the best materials, the quality of which has been confirmed by laboratory tests
- Cool-out hand shower
- The faucet includes a concealed element
- Cleaning agent for fixtures in all colors available
- Ceramic mechanical Click type function switch