THERM

Shower column, with bathtub mixer

Product code: NAC_N1HT
EAN: 5907650815037
Color: nero
Warranty [years]: 5



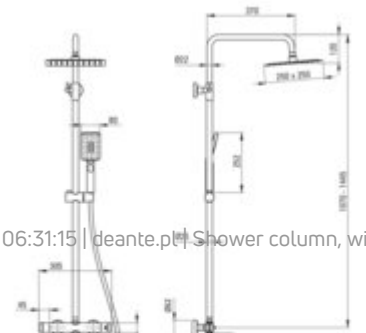

Shower column	
Finish	nero
mixer	yes
Flow class [l/min]	12<= A <15 (12 - 14.9)
Rain head height adjustment	yes
Bar height adjustment from [mm]	1070
Bar height adjustment up to [mm]	1445
Rail	
Material	steel 304
Shower overhead	
Shape	square
Material	stainless steel
Width [mm]	250
Length [mm]	250
Anti-calc	yes
Number of functions	1
Stream type	rain
Hand shower	
Number of functions	3
Anti-calc	yes
Stream type	rain, mist, mixed
Hose	
Length [mm]	1500
Braid material	PVC
Anti-twist	1
Spout	
aerator	yes
Function switch	
Switch type	ceramic mechanical
Mixer	
Mixer type	two-handle, thermostatic
Check valves	yes

Features:

- Combination of functionality and aesthetics
- Ergonomic knobs
- Reinforced check valves compensate for pressure surges
- A movable spout that is also a function switch
- Movable silicone aerator
- 38?C temperature lock
- Top grade brass
- Innovative, durable and easy to clean Nero coating
- Ultra thin steel head
- Anti-calc system facilitating the removal of limescale deposits
- Anti-calc hand shower
- Shower hand angle adjustment
- Dedicated cleaning agent, safe for cleaned surfaces
- Only the best materials, the quality of which has been confirmed by laboratory tests