JOKO
Kitchen tap

Product code: BOJ_066M
EAN: 5908212061022
Color: chrome
Warranty [years]: 5

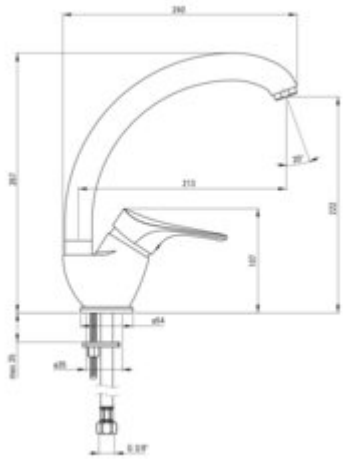

Mixer	
Finish	chrome
Material	brass
Mixer type	single-handle, mixer
Installation method	standing
Total mixer height [mm]	267
Flow class [l/min]	A <= 15 (9.1 - 15)
Acoustic group [dB]	I (x <= 20)
Mixer cartridge	
Ceramic cartridge size	40 mm
Spout	
Spout type	swivel
Mixer spout range [mm]	213
Material	steel 304
Aerator	
Aerator size	M24
Connecting hose	
Length [mm]	350
Installation thread	3/8"
Connection thread	M10

Features:

- Cleaning agent for fixtures in all colors available