ARNIKA

Shower mixer, concealed

Product code: BQA_R44P
EAN: 5907650833413
Color: brushed gold
Warranty [years]: 7

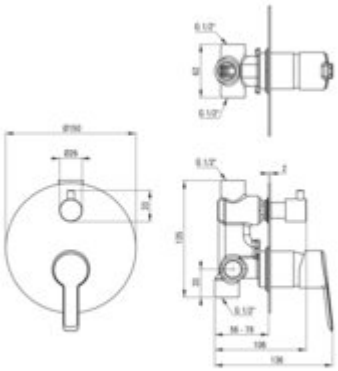

Mixer

Finish	brushed gold
Material	brass
Mixer type	single-handle, mixer
Installation method	concealed
Total mixer height [mm]	84
Flow class [l/min]	S - 15.1-19.8 l/min
Acoustic group [dB]	I (x <= 20)

Mixer cartridge

Ceramic cartridge size	35 mm

Features:

- Design full of beauty and harmony
- The variety of colours gives many arrangement possibilities
- Innovative and easy to maintain brushed gold coating
- The mixer body is made of the highest quality brass
- Flush-mounted installation ensures the aesthetics of the bathroom
- Mechanical ceramic function switch
- Only the best materials, the quality of which has been confirmed by laboratory tests
- Cleaning agent for fixtures in all colors available
- Coating applied using the PVD method
- Deante Design Studio Collection