PRIZMA

Shower wall, walk-in

Product code: KTJ_Z37P
EAN: 5907650885542
Color: gold
Warranty [years]: 5

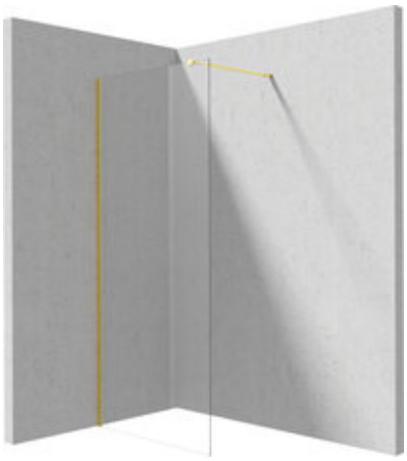

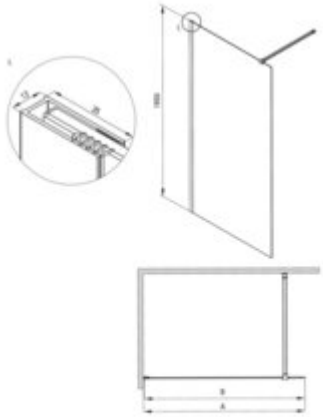



Shower door	
rails	adjustable stiffening the cabin
Showe cabin	
Finish	gold
Width [mm]	700
Height [mm]	1950
Glass finish	transparent
Glass thickness [mm]	6
Active cover	yes
Side dimension [mm]	680
Reversible doors	yes
Installation without shower tray possible	yes

Features:

- Only the best materials, the quality of which has been confirmed by laboratory tests
- Hydrophobic Active-Cover coating that makes it easier for water to run off the glass
- Dedicated to Active Cover surfaces
- Possibility to install the cabin without a shower tray, directly on the tiles
- Safe and durable tempered glass
- Resistance to impacts, chemicals and stains in accordance with PN-EN 14428+A1:2008 norm, c
- Dedicated cleaning agent, safe for cleaned surfaces
- Free combination of elements