ERIDAN

Granite sink, 1-bowl

Product code: ZQE_S103
EAN: 5908212073681
Color: metallic grey
Warranty [years]: 18



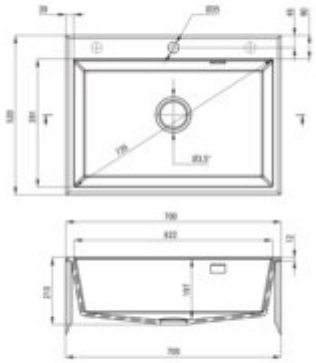

Sink

Finish	metallic grey
Surface type	matte
Material	granite
Installation method	inset
Number of bowls	1
Minimum cabinet width [mm]	700
Width [mm]	520
Length [mm]	700
Height [mm]	210
Bowl depth [mm]	197
Cut-out Length [mm]	680
Cut-out Width [mm]	500
Equipped with accessories	yes
Drain diameter	3.5"
Number of holes	1
Number of pre-drilled holes	2

Sink waste kit

Finish	steel
Plug type	automatic, with a button
Low siphon/ Space saver	yes
possibility to connect a dishwasher/ washing machine	yes

Features:

- Deante Design Studio Collection
- Properties of Deante granite: resistance to impact, high temperature, discoloration, therm
- Longest, 18 years warranty
- The sink is equipped with fittings with a connection to the dishwasher
- Hydrophobic properties repel water molecules
- The finish enriched with silver ions adds antiseptic properties
- The exceptionally spacious and deep bowl will even accommodate trays taken out of the oven
- Additional milled holes for mounting a dispenser or other accessories
- Space-saving siphon which facilitates e.g. sorting waste
- Automatic plug activated with a CLICK button
- Dedicated cleaning agent, safe for cleaned surfaces