LOCO
Kitchen tap

Product code: BLC_062M
EAN: 5907650830641
Color: chrome
Warranty [years]: 5



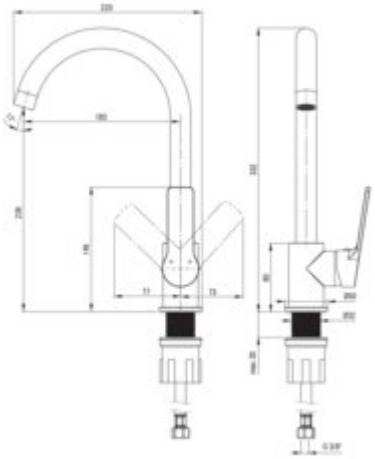

Mixer

Finish	chrome
Mixer type	single-handle, mixer
Installation method	standing
Total mixer height [mm]	332
Flow class [l/min]	Z - 4-9 l/min
Acoustic group [dB]	II (20 < x <= 30)

Mixer cartridge

Ceramic cartridge size	30 mm

Spout

Mixer spout range [mm]	183
Material	steel 304

Aerator

Aerator type	honeycomb
Aerator size	M22

Connecting hose

Length [mm]	350
Installation thread	3/8"
Connection thread	M10

Features:

- Z flow class (4-9 l/min) allowing for water consumption reduction
- The mixer is equipped with a stream aerator
- The mounting sleeve facilitates the installation of the mixer
- 45 cm connection hoses included
- Only the best materials, the quality of which has been confirmed by laboratory tests
- Cleaning agent for fixtures in all colors available