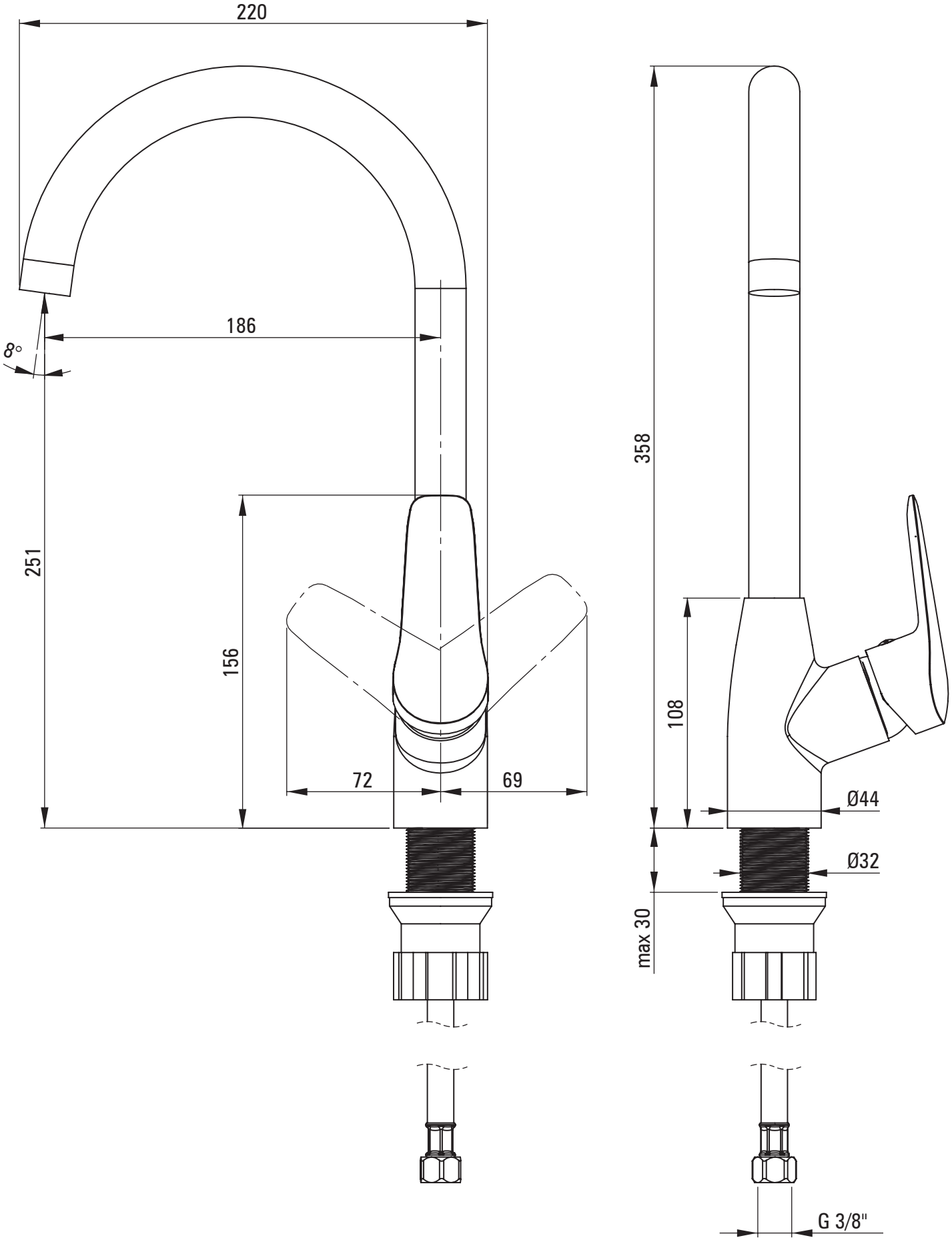
220
186
8°
251
156
72
69
358
108
Ø44
Ø32
max 30
G 3/8"