ERIDAN

Granite sink, 1-bowl with drainer

Product code: ZQE_A113
EAN: 5908212072806
Color: alabaster
Warranty [years]: 18



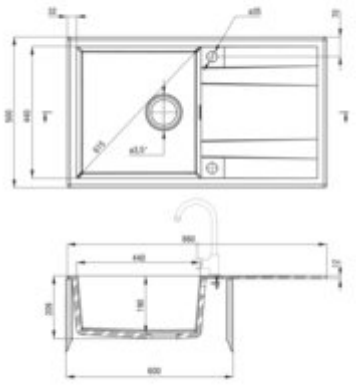

Sink

Finish	alabaster
Surface type	matte
Material	granite
Installation method	inset
Number of bowls	1
Minimum cabinet width [mm]	600
Width [mm]	500
Length [mm]	860
Height [mm]	209
Bowl depth [mm]	190
Cut-out Length [mm]	840
Cut-out Width [mm]	480
Reversible	yes
Equipped with accessories	yes
Drain diameter	3.5''
Number of holes	2

Sink waste kit

Finish	steel
Plug type	automatic, with a button
Low siphon/ Space saver	yes
possibility to connect a dishwasher/ washing machine	yes

Features:

- Deante Design Studio Collection
- Properties of Deante granite: resistance to impact, high temperature, discoloration, therm
- Longest, 18 years warranty
- The sink is equipped with fittings with a connection to the dishwasher
- Hydrophobic properties repel water molecules
- The exceptionally spacious and deep bowl will even accommodate trays taken out of the oven
- Possibility to buy a sponge hook that fits perfectly with this model.
- Possibility to buy a cloth rail that fits perfectly with this model
- Reversible sink - possibility to install the bowl on the left or the right side
- Dedicated cleaning agent, safe for cleaned surfaces
- Automatic plug activated with a CLICK button
- Space-saving siphon which facilitates e.g. sorting waste
- Possibility to purchase a drainer that perfectly fits this model
- The finish enriched with silver ions adds antiseptic properties