ANDANTE FLUSH

Granite sink, 1-bowl with drainer

Product code: ZQN_G11F
EAN: 5908212067451
Color: metallic graphite
Warranty [years]: 18



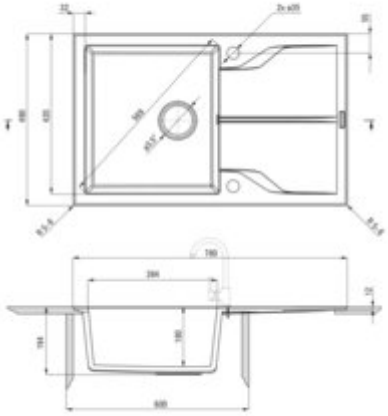

Sink

Finish	metallic graphite
Surface type	matte
Material	granite
Installation method	flush
Number of bowls	1
Minimum cabinet width [mm]	600
Width [mm]	490
Length [mm]	780
Height [mm]	194
Bowl depth [mm]	180
Cut-out Length [mm]	760
Cut-out Width [mm]	470
Reversible	yes
Equipped with accessories	yes
Drain diameter	3.5"
Number of holes	2

Sink waste kit

Finish	nero
Plug type	automatic
Low siphon/ Space saver	yes
possibility to connect a dishwasher/ washing machine	yes

Features:

- Properties of Deante granite: resistance to impact, high temperature, discoloration, therm
- Longest, 18 years warranty
- The sink is equipped with fittings with a connection to the dishwasher
- Accessories with automatic shut-off of the drain
- Hydrophobic properties repel water molecules
- The exceptionally spacious and deep bowl will even accommodate trays taken out of the oven
- Aesthetic installation flush with the countertop
- Reversible sink - possibility to install the bowl on the left or the right side
- The finish enriched with silver ions adds antiseptic properties
- Strainer uniformly dyed in mass
- Space-saving siphon which facilitates e.g. sorting waste
- Dedicated cleaning agent, safe for cleaned surfaces
- Possibility to purchase a drainer that perfectly fits this model