ARNIKA

Concealed shower set, with sliding bar

Product code: NAC_06QP
EAN: 5907650858195
Color: chrome
Warranty [years]: 7



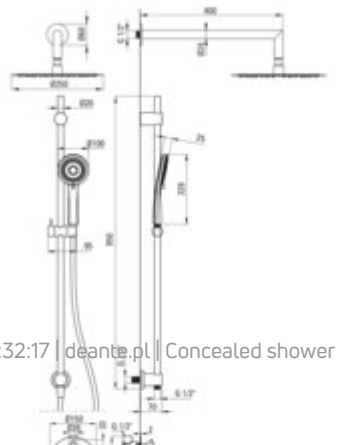

Mixer

Mixer type	single-handle, mixer, 2-function
Installation method	concealed
Flow class [l/min]	S - 15.1-19.8 l/min
Acoustic group [dB]	I (x <= 20)

Spout

Spout type	still
Range of shower/ bath spout [mm]	400

Shower overhead

Shape	round
Material	steel 304
Diameter [mm]	250
Anti-calc	yes
Number of functions	1
Stream type	rain
Quick response time for turning the water on and off	yes

Features:

- Deante Design Studio Collection
- Design full of beauty and harmony
- Only the best materials, the quality of which has been confirmed by laboratory tests
- Anti-twist system, preventing the hose from twisting
- Anti-calc system facilitating the removal of limescale deposits
- The mixer body is made of the highest quality brass
- Flush-mounted installation ensures the aesthetics of the bathroom
- Mechanical ceramic function switch
- The faucet includes a concealed element
- Dedicated cleaning agent, safe for cleaned surfaces