CORDA

Granite sink, 1-bowl

Product code: ZQA_S10C
EAN: 5908212042281
Color: metallic grey
Warranty [years]: 18



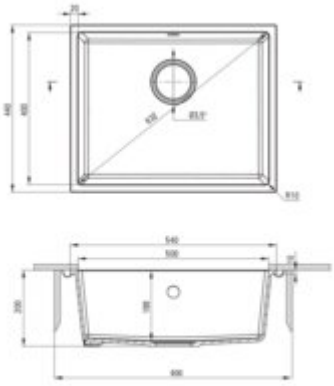

Sink

Finish	metallic grey
Surface type	matte
Material	granite
Installation method	undermount, inset, flush
Number of bowls	1
Minimum cabinet width [mm]	600
Width [mm]	440
Length [mm]	540
Height [mm]	200
Bowl depth [mm]	188
Cut-out Length [mm]	500
Cut-out Width [mm]	400
Reversible	no
Equipped with accessories	yes
Drain diameter	3.5"

Sink waste kit

Finish	steel
Plug type	manual
Low siphon/ Space saver	yes
possibility to connect a dishwasher/ washing machine	yes

Features:

- Deante Design Studio Collection
- ATTENTION! Before cutting a hole in the tabletop to install the sink, take into account th
- Properties of Deante granite: resistance to impact, high temperature, discoloration, therm
- Longest, 18 years warranty
- The sink is equipped with fittings with a connection to the dishwasher
- Hydrophobic properties repel water molecules
- The finish enriched with silver ions adds antiseptic properties
- The exceptionally spacious and deep bowl will even accommodate trays taken out of the oven
- Dedicated cleaning agent, safe for cleaned surfaces
- Space-saving siphon which facilitates e.g. sorting waste
- Possibility to purchase a drainer that perfectly fits this model